MAN 1000102670 ML Version: B Status: RL (released | freigegeben) printed: 23.04.2009

Operating Instructions

559168 Display Module

Indicating and adjustment module

Industrial Dynamics Co
1-800-940-0453

bürkert
FLUID CONTROL SYSTEMS

Contents

MAN 1000102670 ML Version: B Status: RL (released | freigegeben) printed: 23.04.2009

32057-EN-081002

MAN 1000102670 ML Version: B Status: RL (released | freigegeben) printed: 23.04.2009

1 About this document

1.1 Function

This operating instructions manual provides all the information you need for mounting, connection and setup as well as important instructions for maintenance and fault rectification. Please read this information before putting the instrument into operation and keep this manual accessible in the immediate vicinity of the device.

1.2 Target group

This operating instructions manual is directed to trained personnel. The contents of this manual should be made available to these personnel and put into practice by them.

1.3 Symbolism used

Information, tip, note
This symbol indicates helpful additional information.

Caution: If this warning is ignored, faults or malfunctions can result.
Warning: If this warning is ignored, injury to persons and/or serious damage to the instrument can result.
Danger: If this warning is ignored, serious injury to persons and/or destruction of the instrument can result.

Ex applications
This symbol indicates special instructions for Ex applications.

• **List**
The dot set in front indicates a list with no implied sequence.

→ **Action**
This arrow indicates a single action.

1 **Sequence**
Numbers set in front indicate successive steps in a procedure.

32057-EN-081002

2 For your safety

2.1 Authorised personnel

All operations described in this operating instructions manual must be carried out only by trained specialist personnel authorised by the plant operator.

During work on and with the device the required personal protection equipment must always be worn.

2.2 Appropriate use

The pluggable indicating and adjustment module is used for measured value indication, adjustment and diagnosis of level sensors with radar, ultrasonic as well as guided microwave.

You can find detailed information on the application range in chapter "*Product description*".

Operational reliability is ensured only if the instrument is properly used according to the specifications in the operating instructions manual as well as possible supplementary instructions.

For safety and warranty reasons, any invasive work on the device beyond that described in the operating instructions manual may be carried out only by personnel authorised by the manufacturer. Arbitrary conversions or modifications are explicitly forbidden.

2.3 Warning about misuse

Inappropriate or incorrect use of the instrument can give rise to application-specific hazards, e.g. vessel overfill or damage to system components through incorrect mounting or adjustment.

2.4 General safety instructions

This is a high-tech instrument requiring the strict observance of standard regulations and guidelines. The user must take note of the safety instructions in this operating instructions manual, the country-specific installation standards as well as all prevailing safety regulations and accident prevention rules.

The instrument must only be operated in a technically flawless and reliable condition. The operator is responsible for trouble-free operation of the instrument.

MAN 1000102670 ML Version: B Status: RL (released | freigegeben) printed: 23.04.2009

During the entire duration of use, the user is obliged to determine the compliance of the required occupational safety measures with the current valid rules and regulations and also take note of new regulations.

2.5 Safety approval markings and safety tips

The safety approval markings and safety tips on the device must be observed.

2.6 CE conformity

The indicating and adjustment module is in CE conformity to EMC (89/336/EWG) and LVD (73/23/EWG).

Conformity has been judged according to the following standards:

- EMC:
  - Emission EN 61326: 1997
  - Susceptibility EN 61326: 1997 + A1:1998
- LVD: EN 61010-1: 2001

2.7 Compatibility according to NAMUR NE 53

With respect to compatibility, NAMUR recommendation NE 53 is met.

The parameter adjustment of the basic sensor functions is independent of the software version. The range of available functions depends on the respective software version of the individual components.

2.8 Safety instructions for Ex areas

Please note the Ex-specific safety information for installation and operation in Ex areas. These safety instructions are part of the operating instructions manual and come with the Ex-approved instruments.

32057-EN-081002

3 Product description

3.1 Configuration

Scope of delivery

The scope of delivery encompasses:

- Indicating and adjustment module
- Documentation
  - this operating instructions manual

Equipment

The indicating and adjustment module is provided with a display in full dot matrix as well as four keys for adjustment. From a hardware version …- 01 or higher of the indicating and adjustment module as well as the respective sensor, an integrated backlight can be switched on via the adjustment menu. The hardware revision is stated on the respecitive type label of indicating and adjustment module or the sensor electronics.

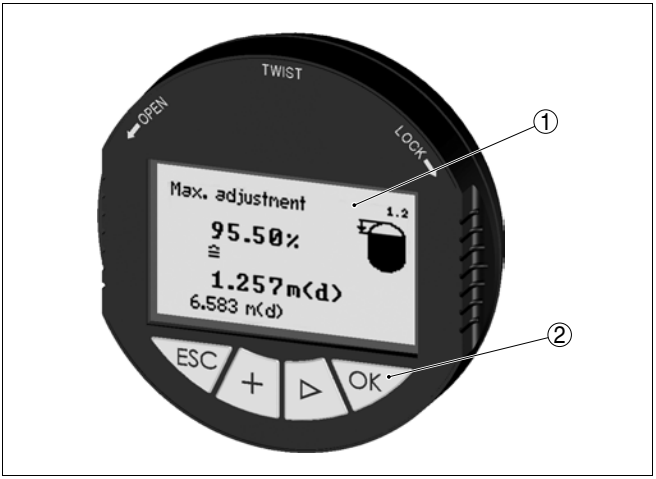

Fig. 1: Indicating and adjustment module
1 Display
2 Keys

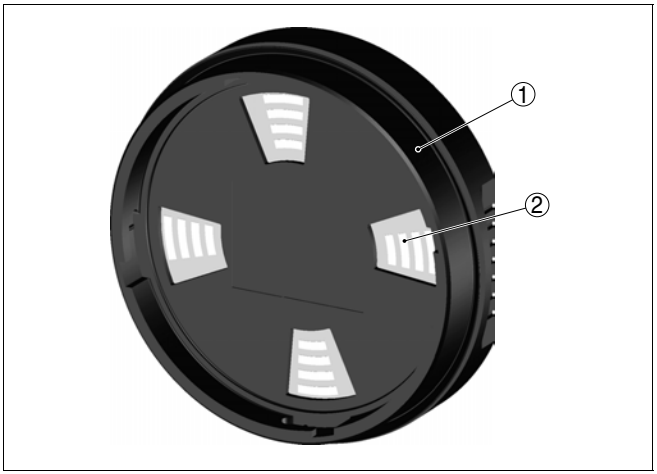

Fig. 2: Rear of the indicating/adjustment module
1 Integrated seal ring
2 Gold plated contact paths

3.2 Principle of operation

Area of application

The indicating and adjustment module is used for measured value indication, adjustment and diagnosis for the following sensors:

- Radar 8136, 8137, 8138
- Guided microwave 8185, 8186
- Ultrasonic 8176, 8177, 8178

The indicating and adjustment module is integrated into the respective sensor housing. After installation, sensor as well as module without housing cover are splash-proof.

Power supply

Power is supplied directly by the respective sensor. An additional connection is not necessary.

The backlight is also powered by the sensor. Prerequisite for this is a supply voltage at a certain level. The exact voltage specifications can be found in the operating instructions manual of the respective sensor.

3.3 Operation

The adjustment is carried out via the integrated keys. The entered parameters are generally saved in the respective sensor. A copy function enables loading of the parameters into the indicating and adjustment module.

3.4 Packaging, transport and storage

Packaging

Your instrument was protected by packaging during transport. Its capacity to handle normal loads during transport is assured by a test according to DIN EN 24180.

The packaging of standard instruments consists of environment-friendly, recyclable cardboard. For special versions, PE foam or PE foil is also used. Dispose of the packaging material via specialised recycling companies.

Transport

Transport must be carried out under consideration of the notes on the transport packaging. Nonobservance of these instructions can cause damage to the device.

Transport inspection

The delivery must be checked for completeness and possible transit damage immediately at receipt. Ascertained transit damage or concealed defects must be appropriately dealt with.

Storage

Up to the time of installation, the packages must be left closed and stored according to the orientation and storage markings on the outside.

Unless otherwise indicated, the packages must be stored only under the following conditions:

- Not in the open
- Dry and dust free
- Not exposed to corrosive media
- Protected against solar radiation
- Avoiding mechanical shock and vibration

Storage and transport temperature

- Storage and transport temperature see "*Supplement - Technical data - Ambient conditions*"
- Relative humidity 20 … 85 %

4 Mounting

4.1 Mounting steps

Mount/Dismount indicating and adjustment module

The indicating and adjustment module can be inserted or removed at any time. It is not necessary to interrupt the voltage supply.

For mounting, proceed as follows:

1 Unscrew the housing cover

2 Place the indicating/adjustment module in the requested position on the electronics

Information:
Four different positions are possible, each displaced by 90°.

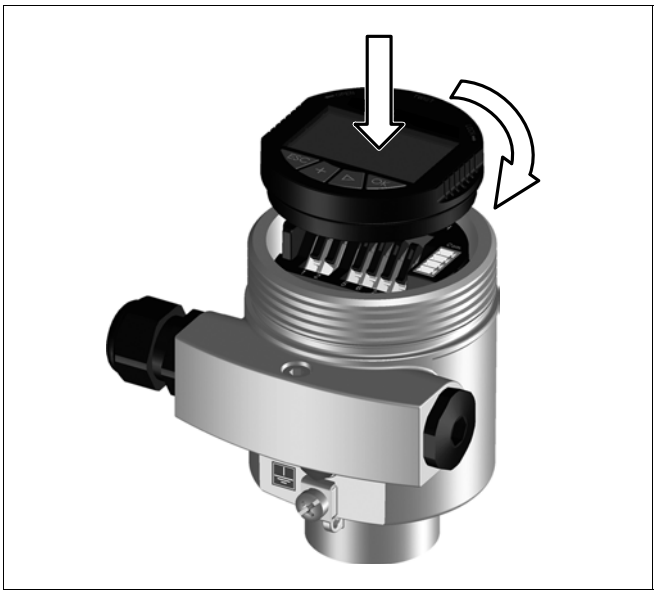

Fig. 3: Mounting the indicating and adjustment module

3 Press the indicating/adjustment module lightly onto the electronics and turn it to the right until it snaps in

4 Screw housing cover with inspection window tightly back on

MAN 1000102670 ML Version: B Status: RL (released | freigegeben) printed: 22.04.2009

32057-EN-081002

Note:
If you intend to retrofit the instrument with an indicating and adjustment module for continuous measured value indication, a higher cover with an inspection glass is required.

Dismounting is carried out in reverse order.

5 Set up

5.1 Adjustment system

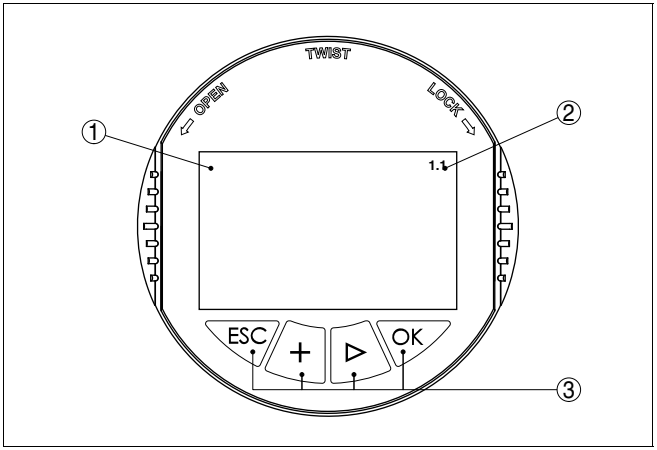

Fig. 4: Indicating and adjustment elements
1 LC display
2 Indication of the menu item number
3 Adjustment keys

Key functions

- ***[OK]*** key:
  - Move to the menu overview
  - Confirm selected menu
  - Edit parameter
  - Save value
- ***[->]*** key to select:
  - menu change
  - list entry
  - Select editing position
- ***[+]*** key:
  - Change value of the parameter
- ***[ESC]*** key:
  - interrupt input
  - jump to the next higher menu

Adjustment system

The sensor is adjusted via the four keys of the indicating and adjustment module. The LC display indicates the individual menu items. The functions of the individual keys are shown in the above illustration. Approx. 10 minutes after the last

MAN 1000102670 ML Version: B Status: RL (released | freigegeben) printed: 23.04.2009

32057-EN-081002

pressing of a key, an automatic reset to measured value indication is triggered. Any values not confirmed with ***[OK]*** will not be saved.

5.2 General functions

Introduction

Sensors of the LEVEL TRANSMITTER series have manifold functions at their disposal. This allows them to be adapted perfectly to the respective application. These functions are structured in menu form. Some of the functions are sensor-specific. These are described in the operating instructions manual of the respective sensor. Other functions, however, have general character, i.e. they are available in sensors that operate according to other measuring principles.

The general functions are described in this paragraph. The functions of the indicating/adjustment module are determined by the sensor and correspond to the respective software version of the sensor.

Information:
The respective menu item number differs depending on the sensor type and signal output.

Measured value indication

The following presentations are available in the measured value display:

- Level as digital value, sensor TAG
- Level as digital value and bar graph, sensor TAG

With ***[->]*** you select the different presentations of the measured value. You can reach the menu overview from any presentation with ***[OK]***. With ***[ESC]*** you return from the menu overview to the measured value display.

Menu overview

In the menu overview you select the appropriate menu with ***[->]*** and open it with ***[OK]***. Then the individual menu items are available.

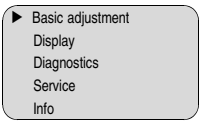

Menu section, basic adjustment

Damping

To damp process-dependent measured value fluctuations, you have to set an integration time of 0 … 999 s in this menu item.

Depending on the sensor type, the factory setting is 0 s or 1 s.

Damping

0 s

Linearisation curve

In this menu item you select the linearization curve:

- linear
- Cylindrical tank
- Spherical tank
- User programmable

User programmable means: Switching on a linearization curve programmed via PC and PACTware

The linearization curve creates a correlation between height and volume. It takes into account the vessel geometry for the displayed measured value and current output.

Factory setting is linear.

Linearisation curve

linear

Edit sensor TAG

In the menu item "*Sensor-TAG*" you edit a 12-digit measurement loop name. An unambiguous designation can hence be assigned to the sensor, e.g. the measurement loop name or the tank or product designation. In digital systems and in the documentation of larger plants, a singular designation should be entered for exact identification of individual measuring sites.

The available digits comprise:

- Letters from A … Z
- Numbers from 0 … 9
- Special characters +, -, /, -

Factory setting is "*Sensor*".

Sensor-TAG

Sensor

Menu section, display

Lighting

An integrated background lighting can be switched via the adjustment menu. The following version is necessary:

- Indicating and adjustment module …- 01 or higher
- Sensor electronics 4 … 20 mA …- 01 or higher

The version is stated on the type label of the indicating and adjustment module or the sensor electronics. The function depends also on the height of the supply voltage, see operating instructions manual of the respective sensor.

In the default setting, the lightning is switched off.

Menu section, diagnostics

Pointer

Min. and max. measured values are saved in the sensor. The values are displayed in the menu item "*Peak values*".

- Min. and max. distance in m(d)
- Min. and max. temperature

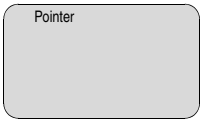

Meas. reliability

When non-contact level sensors are used, the measurement can be influenced by the respective process conditions. In this menu item, the measurement reliability of the level echo is displayed as dB value. The measurement reliability equals signal strength minus noise. The higher the value, the more reliable the measurement. With a functioning measurement, the values are > 10 dB.

Sensor status

In this menu item, the device status is displayed. If the sensor detects a fault, "*OK*" will be displayed. If a fault is detected, a flashing failure message is outputted sensor-specifically, e.g. "*E013*". The fault is also displayed in clear text, e.g. "*No measurement value*".

Information:
The fault message as well as the clear text indication are also carried out in the measured value display.

Sensor status

Curve selection

With ultrasonic and radar sensors as well as sensors with guided microwave, the "**Echo curve**" represents the signal strength of the echoes over the measuring range. The units of the signal strength are "dB" (ultrasonic and radar) and "Volt" (guided microwave). The signal strength enables the assessment of the quality of the measurement.

With ultrasonic and radar sensors, the "**False echo curve**" represents the saved false echoes (see menu "*Service*") of the empty vessel with signal strength in "dB" over the measuring range.

Up to 3000 measured values are recorded (depending on the sensor) when starting a "**Trend curve**". Then the values can be displayed on a time axis. The oldest measured values are always deleted.

In the menu item "*Choose curve*", the respective curve is selected.

Curve selection

Echo curve ▼

Information:
The trend recording is not activated when being shipped. It must be started by the user via the menu item "*Start trend curve*".

Curve presentation

A comparison of echo and false echo curve allows a more detailled specification on the measurement reliability. The selected curve is updated permanently. With the ***[OK]*** key, a submenu with zoom functions is opened.

The following functions are available with "**Echo and false echo curve**":

- "X-Zoom": Zoom function for the meas. distance
- "Y-Zoom": 1, 2, 5 and 10-times signal magnification in "*dB*"
- "Unzoom": Reset the presentation to the nominal measuring range with single magnification

In the menu item "**Trend curve**" the following are available:

- "X-Zoom": Resolution
  - 1 minute
  - 1 hour
  - 1 day
- "Stop/Start": Interrupt a recording or start a new recording
- "Unzoom": Reset the resolution to minutes

As default setting, the recording pattern has 1 minute. With the adjustment software PACTware, this pattern can be also set to 1 hour or 1 day.

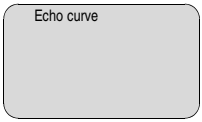

Menu section, service

Simulation of measured values

In this menu item you simulate individual level values via the current output. This allows the signal path to be tested, e.g. via connected indicating instruments or the input card of the processing system.

The following simulation variables are available:

- Percent
- Current
- Distance

How to start the simulation:

1 Push ***[OK]***

2 Select the requested simulation variable with ***[->]*** and confirm with ***[OK]***

3 Set the requested value with ***[+]*** and ***[->]***.

4 Push ***[OK]***

The simulation is activated and a corresponding current in the range of 4 … 20 mA is outputted.

How to interrupt the simulation:

→ Push ***[ESC]***

Information:
The simulation is terminated automatically 10 minutes after the last key has been pushed.

Start simulation?

Reset

With the reset function, modified values are reset. Three subfunctions are available:

- Basic adjustment
  - Reset the values modified with the indicating and adjustment module to the sensor-specific basic setting
- Factory setting
  - As basic adjustment, but also reset of special parameters to the default values[1)]
- Peak values measured value and temperature[2)]
  - Reset of the min./max. values of pressure, level and temperature to the current values

Information:
Because the reset values are nearly sensor-specifc, they are listed in the operating instructions manual of the respective sensor.

Reset

Select reset?

Unit of measurement

In this menu item you select the internal unit of calculation of the sensor: m(d) or ft(d).

Unit of measurement

m(d)

Language

The sensor is already set to the ordered national language. In this menu item you can change the language. The following languages are available:

- Deutsch
- English
- Français

1) Special parameters are parameters which are set customer-specifically on the service level with the adjustment software PACTware.
2) Temperature only with ultrasonic sensors.

- Espanõl
- Pycckuu
- Japanese
- Chinese

Language

Deutsch

Copy sensor data

With this function

- Load parameter adjustment data from the sensor into the indicating and adjustment module
- Write parameter adjustment data from the indicating and adjustment module into the sensor

The data are permanently saved in an EEPROM memory in the indicating and adjustment module and remain there even in case of power failure. From there, they can be written in one or several sensors or kept as backup for a probable sensor exchange.

Information:
Before writing the data into the sensor, it is checked if the data fit the sensor. If data do not fit, a fault signal is triggered or the function is blocked. When writing data into the sensor, you will see from which instrument type the data originate and which TAG-no. this sensor had.

The following items are checked:

- Software version
- WHG approval
- SIL activated
- Measuring principle
- Signal output

Copy sensor data

PIN

In this menu item, the PIN is activated/deactivated permanently. Entering a 4-digit PIN protects the sensor data against unauthorized access and unintentional modifications. If the PIN is activated permanently, it can be deactivated temporarily (i.e. for approx. 60 min.) in any menu item. The instrument is delivered with the PIN set to 0000.

PIN

Disable permanently?

Only the following functions are permitted with activated PIN:

- Select menu items and show data
- Read data from the sensor into the indicating/adjustment module.

Menu section, info

Info

In this menu item the most important sensor information can be displayed:

- Sensor type
- Serial number: 8-digit number, e.g. 12345678

Sensor type

Serial number
12345678

- Date of manufacture: Date of the factory calibration, e.g. 10. January 2008
- Software version: Edition of the sensor software, e.g. 3.50

Date of manufacture
10. January 2008
Software version
3.50

- Date of last change using PC: Date of the last change of sensor parameters via PC, e.g. 10. January 2008

Last change using PC

10. January 2008

- Sensor details, e.g. approval, process fitting, seal, measuring cell, measuring range, electronics, housing, cable entry, plug, cable length etc.

Sensor characteristics

Display now?

5.3 Special functions - 4 … 20 mA/HART

Introduction

The 4 … 20 mA/HART special functions are briefly described in this paragraph. The respective range of functions of the indicating and adjustment module is determined by the sensor and the sensor software version.

Display

In the menu item "*Display*" you can define how the measured value should be presented on the display.

The following indication values are available:

- Height
- Distance
- Current
- Scaled
- Percent
- Lin. percent

The selection "*scaled*" opens the menu items "*Display unit*" and "*Scaling*". In "*Display unit*" there are the following options:

- Height
- Mass
- Flow
- Volume
- Without unit

Depending on selection, the different units are in turn available.

In the menu item "*Scaling*", the requested numerical value with decimal point is entered for 0 % and 100 % of the measured value.

There is the following relation between the indication value in the menu "*Display*" and the adjustment unit in the menu "*Basic adjustment*":

- With ultrasonics, the indication value "*Distance*" means: Presentation of the measured value in the selected adjustment unit, e.g. m(d).

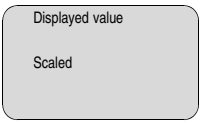

Display unit

Volume
l

Scaling

0 % = 0.0 l
100 % = 100.0 l

Menu section, service

Current output

In the menu item "*Current output*" you determine the behaviour of the current output during operation and in case of failure. The following options are available:

Current output

Characteristics	**4 … 20 mA** 20 … 4 mA
Failure mode[3]	Hold value 20.5 mA 22 mA **< 3.6 mA**
Min. current[4]	**3.8 mA** 4 mA
Max. current[5]	**20 mA** 20.5 mA

The values in bold font represent the data of the factory setting.

In HART multidrop mode, the current is constantly 4 mA. This value does not change even in case of failure.

Current output

Output mode: 4-20 mA ▼
Failure mode: 22 mA ▼
Min. current 3.8 mA ▼

HART mode

HART offers standard and multidrop mode.

The mode standard with the fixed address 0 means output of the measured value as 4 … 20 mA signal.

[3] Value of the current output in case of failure, e.g. if no valid measured value is delivered.
[4] This value is not underrun during operation.
[5] This value is not exceeded during operation.

In Multidrop mode, up to 15 sensors can be operated on one two-wire cable. An address between 1 and 126 must be assigned to each sensor.[6)]

In this menu item you determine the HART mode and enter the address for multidrop.

HART mode

Standard
Address 0

The default setting is standard with address 0.

6) The 4 … 20 mA signal of the HART sensor is switched off. The sensor consumes a constant current of 4 mA. The measuring signal is transmitted exclusively as digital HART signal.

5.4 Menu plan ultrasonic sensor

Information:
Depending on the version and application, the highlighted menu windows are not always available.

Basic adjustment

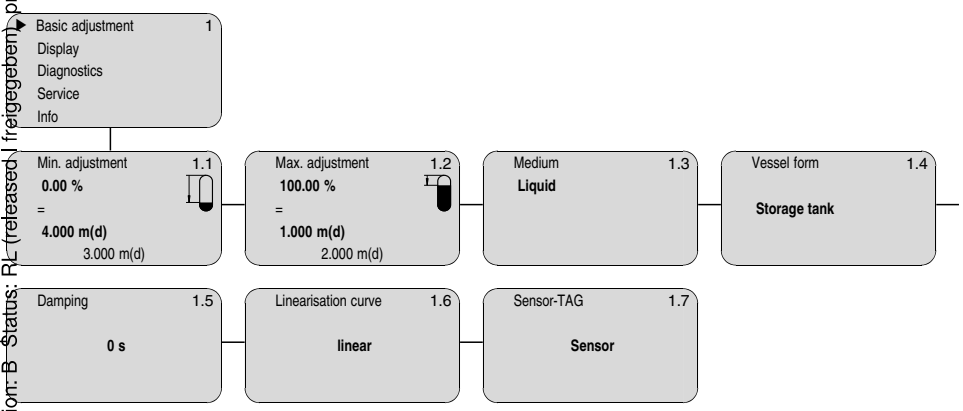

Display

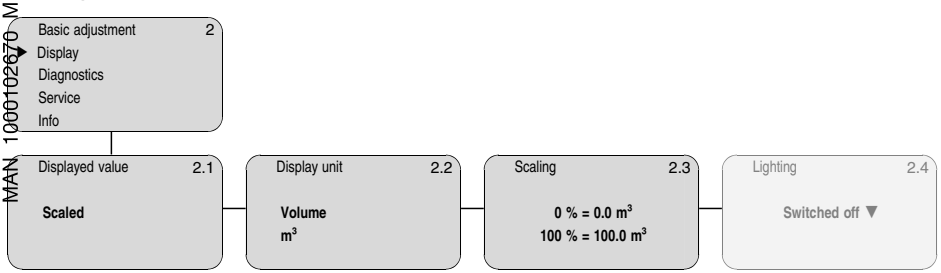

Diagnostics

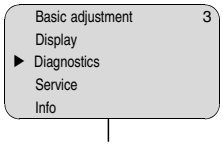

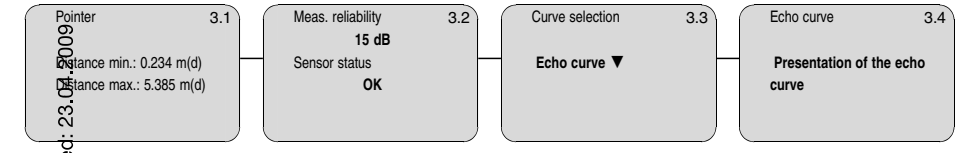

Service

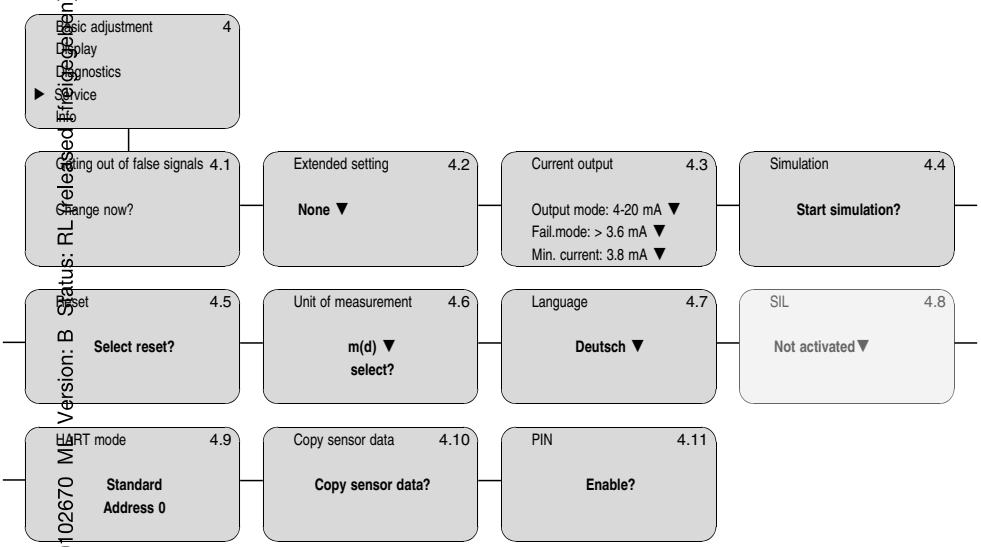

Info

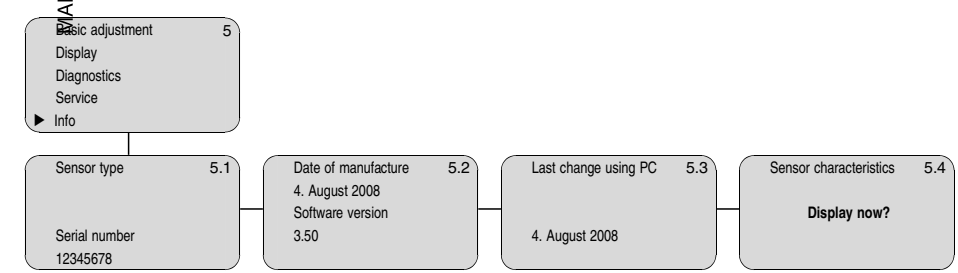

5.5 Saving the parameter adjustment data

It is recommended noting the adjusted data, e.g. in this operating instructions manual and archive them afterwards. They are hence available for multiple use or service purposes.

Alternatively the data can be loaded from the sensor into the indicating and adjustment module. The procedure is described in the menu item "*Copy sensor data*". The data remain there even the power supply fails.

If it is necessary to exchange the sensor, the indicating and adjustment module is inserted into the replacement instrument and the data are written into the sensor under the menu item "*Copy sensor data*".

6 Maintenance and fault rectification

6.1 Maintenance

When used in the correct way, no special maintenance is required in normal operation.

MAN 1000102670 ML Version: B Status: RL (released | freigegeben) printed: 23.04.2009

7 Dismounting

7.1 Dismounting steps

Warning:
Before dismounting, be aware of dangerous process conditions such as e.g. pressure in the vessel, high temperatures, corrosive or toxic products etc.

Take note of chapters "*Mounting*" and "*Connecting to power supply*" and carry out the listed steps in reverse order.

7.2 Disposal

The indicating and adjustment module consists of materials which can recycled by specialised recycling companies. We have purposely designed the components to be easily separable.

WEEE directive 2002/96/EG
This indicating and adjustment module is not subject to the WEEE directive 2002/96/EG and the respective national laws (in Germany, e.g. ElektroG). Pass the indicating and adjustment module directly on to a specialised recycling company and do not use the municipal collecting points. They may only be used for privately used products according to the WEEE directive.

Correct disposal avoids negative effects to persons and environment and ensures recycling of useful raw materials.

Materials: see chapter "*Technical data*"

If you have no possibility to dispose of the old instrument professionally, please contact us concerning return and disposal.

32057-EN-081002

8 Supplement

8.1 Technical data

General data	
Weight	approx. 150 g (0.33 lbs)

Ambient conditions	
Ambient temperature	-15 … +70 °C (+5 … +158 °F)
Storage and transport temperature	-40 … +80 °C (-40 … +176 °F)

Indicating and adjustment module	
Voltage supply and data transmission	through the sensor
Indication	LC display in dot matrix
Adjustment elements	4 keys
Protection	
– disassembled	IP 20
– mounted into the sensor without cover	IP 40
Materials	
– Housing	ABS
– Inspection window	Polyester foil

Display light	
Voltage supply	through the sensor, voltage range see sensor operating instructions manual

8.2 Dimensions

Indicating and adjustment module

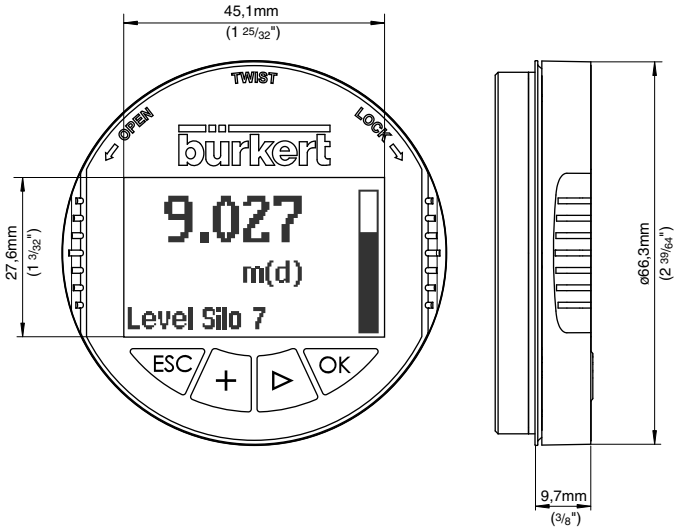

Fig. 5: Indicating and adjustment module